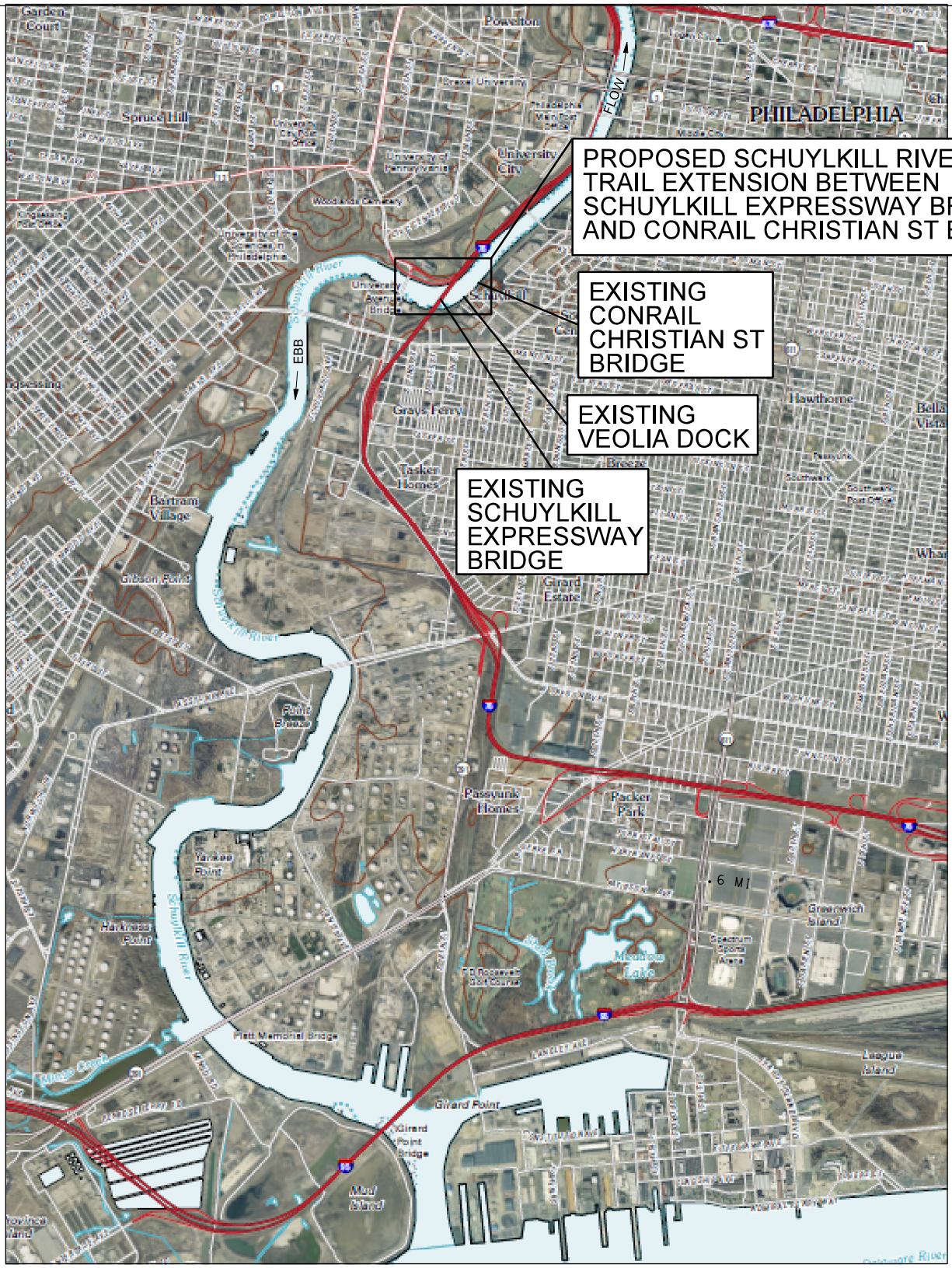

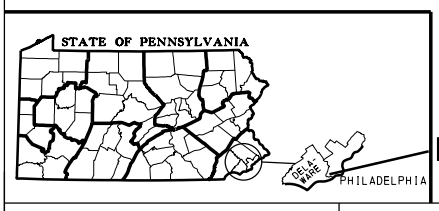

PROJECT LOCATION

PROJECT LOCATION AND VICINITY

SCALE
0 2000 4000 FT

COMMONWEALTH OF PENNSYLVANIA
REGISTERED PROFESSIONAL
JOEL LLOYD CUMMINGS
ENGINEER
NO. 055720-E

10/09/2020

CONSULTANT/AGENT:
AECOM, INC.
1700 MARKET STREET
SUITE 1600
PHILADELPHIA, PA 19103

APPLICANT/OWNER:
CITY OF PHILADELPHIA
1515 ARCH ST. 10" FL
PHILADELPHIA, PA 19107

SCHUYLKILL RIVER PARK EXTENSION BETWEEN MP 6.3 AND MP 6.4 BRIDGE NOS. L-279 AND L-280 OVER SCHUYLKILL RIVER

LOCATION:
CITY OF PHILADELPHIA
PENNSYLVANIA

DATE: 9/16/2020
SHEET 1 OF 4

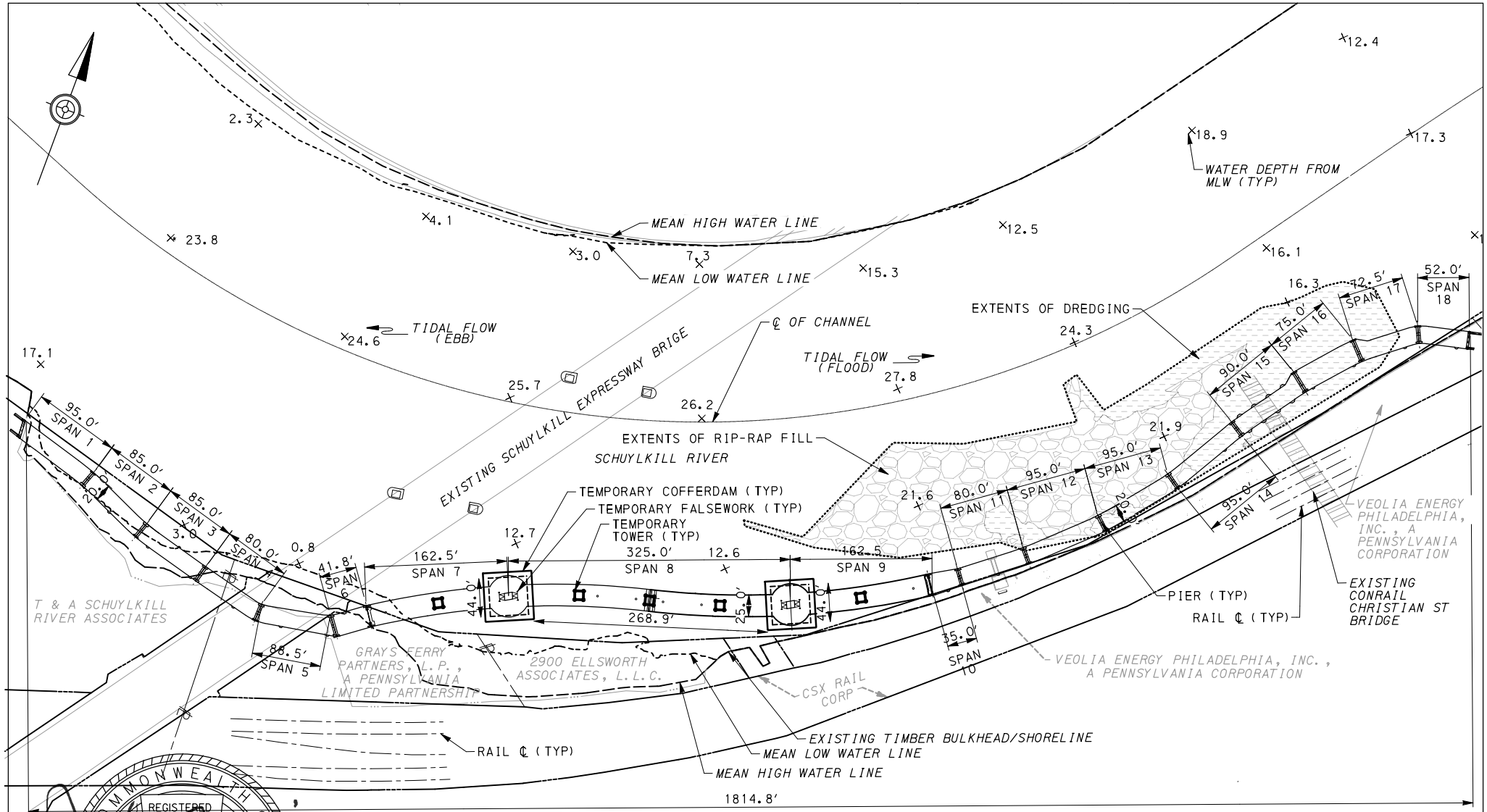

COMMONWEALTH OF PENNSYLVANIA
REGISTERED PROFESSIONAL
JOEL LLOYD CUMMINGS
ENGINEER
NO. 055720-E

10/09/2020

GENERAL PLAN

SCALE
0 80 160 FEET

THE HORIZONTAL DATUM IS REFERENCED TO PENNSYLVANIA (SOUTH) STATE PLANE COORDINATE SYSTEM, NORTH AMERICAN DATUM 1983.

THE VERTICAL DATUM IS BASED ON N.A.V.D. 1988 (GEOID 12A) PER RTK GPS OBSERVATIONS.

NET FILL OF RIVERBED BELOW MEAN HIGH WATER LINE: 2,409 CY

USCG DOES NOT APPROVE THE LOCATION OF FILL, RIP-RAP, OR DREDGING.

CONSULTANT/AGENT:	APPLICANT/OWNER:	SCHUYLKILL RIVER PARK EXTENSION BETWEEN MP 6.3 AND MP 6.4 BRIDGE NOS. L-279 AND L-280 OVER SCHUYLKILL RIVER	LOCATION: CITY OF PHILADELPHIA, PENNSYLVANIA
AECOM, INC. 1700 MARKET STREET SUITE 1600 PHILADELPHIA, PA 19103	CITY OF PHILADELPHIA 1515 ARCH ST. 10TH FL PHILADELPHIA, PA 19107		DATE: 9/22/2020 SHEET 2 OF 4

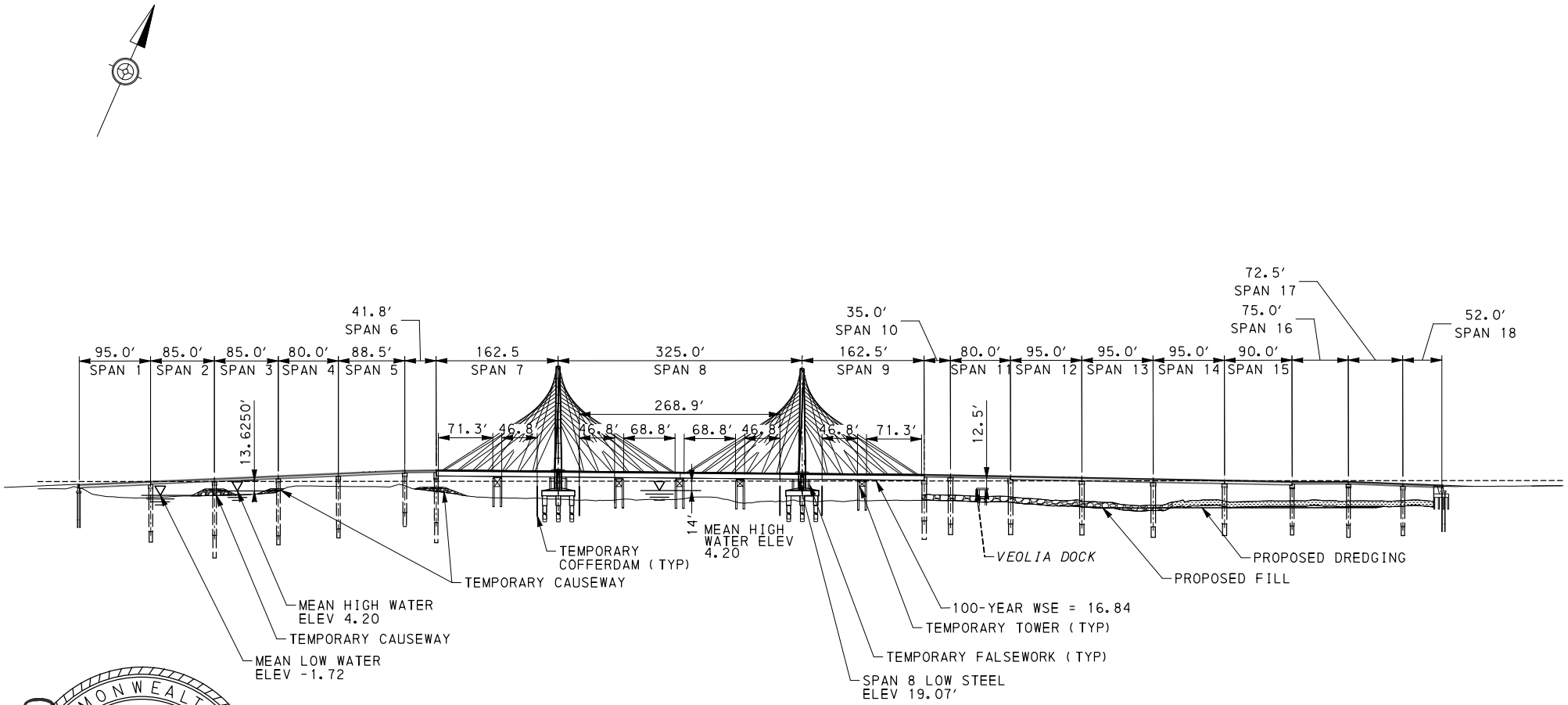

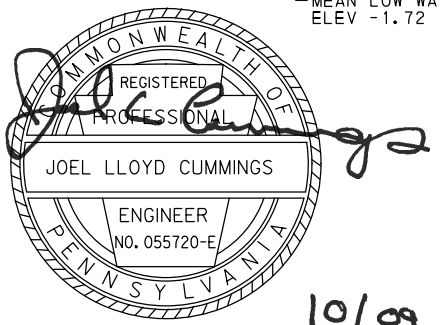

10/09/2020

SCALE
0 100 200 FEET

THE HORIZONTAL DATUM IS REFERENCED TO PENNSYLVANIA (SOUTH) STATE PLANE COORDINATE SYSTEM, NORTH AMERICAN DATUM 1983.

THE VERTICAL DATUM IS BASED ON N.A.V.D. 1988 (GEOID 12A) PER RTK GPS OBSERVATIONS.

NET FILL OF RIVERBED
BELOW MEAN HIGH WATER LINE: 2,409 CY

CONSULTANT/AGENT: AECOM,INC. 1700 MARKET STREET SUITE 1600 PHILADELPHIA, PA 19103	**APPLICANT/OWNER:** CITY OF PHILADELPHIA 1515 ARCH ST. 10TH FL PHILADELPHIA, PA 19107	SCHUYLKILL RIVER PARK EXTENSION BETWEEN MP 6.3 AND MP 6.4 BRIDGE NOS. L-279 AND L-280 OVER SCHUYLKILL RIVER	LOCATION: CITY OF PHILADELPHIA, PENNSYLVANIA

DATE: 10/09/2020
SHEET 3 OF 4

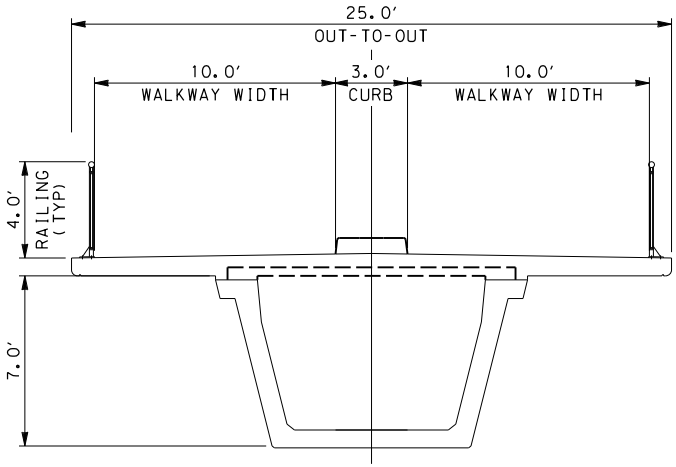

SPANS 7-9

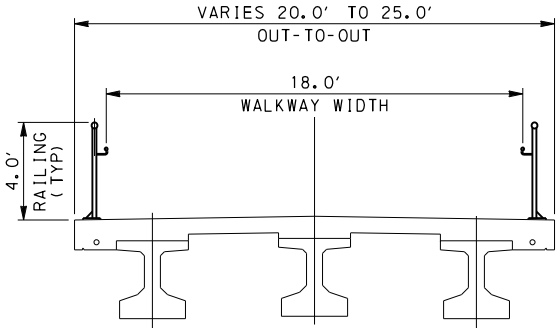

SPANS 1-6 AND 10-18

TYPICAL SECTION

2 0 2 4 FEET

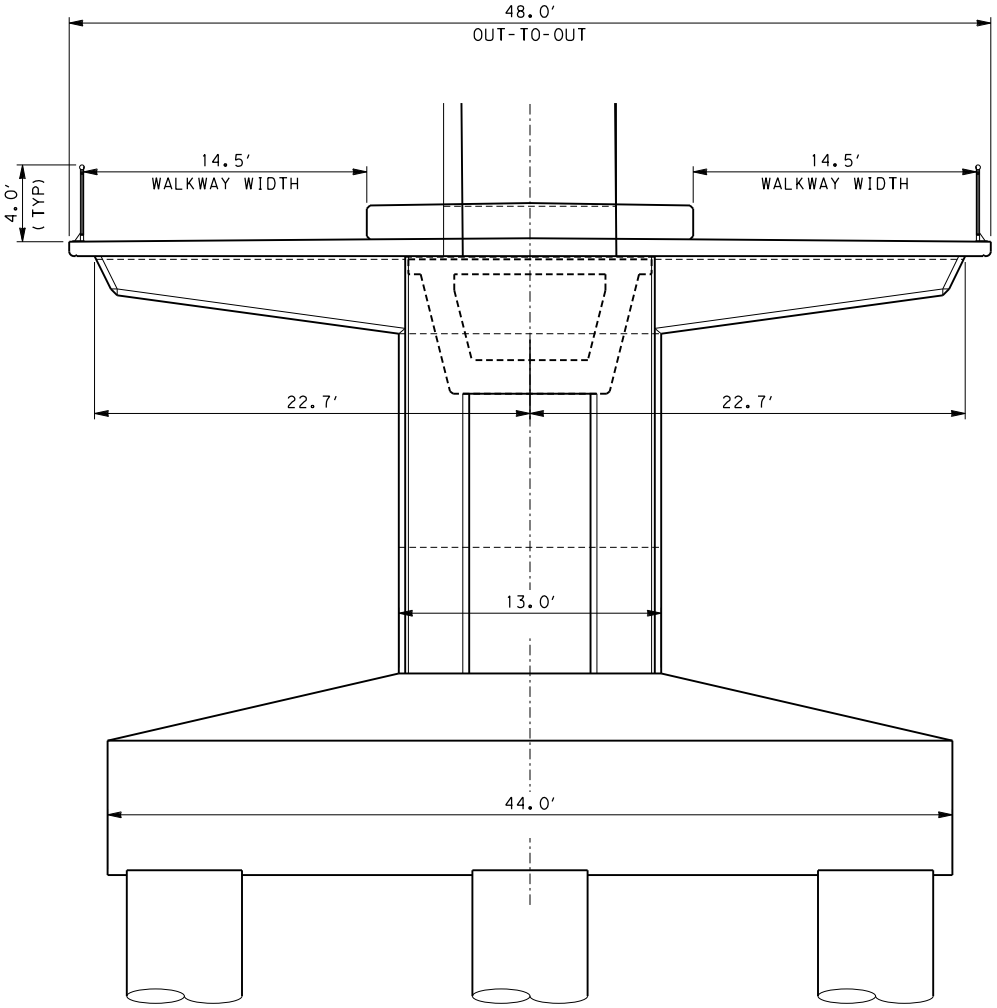

TYPICAL SECTION - TOWER

2.5 0 2.5 5 FEET

COMMONWEALTH OF PENNSYLVANIA
REGISTERED PROFESSIONAL
JOEL LLOYD CUMMINGS
ENGINEER
NO. 055720-E

10/09/2020

CONSULTANT/AGENT:	APPLICANT/OWNER:		LOCATION:
AECOM, INC. 1700 MARKET STREET SUITE 1600 PHILADELPHIA, PA 19103	CITY OF PHILADELPHIA 1515 ARCH ST. 10TH FL PHILADELPHIA, PA 19107	SCHUYLKILL RIVER PARK EXTENSION BETWEEN MP 6.3 AND MP 6.4 BRIDGE NOS. L-279 AND L-280 OVER SCHUYLKILL RIVER	CITY OF PHILADELPHIA, PENNSYLVANIA

DATE: 9/16/2020
SHEET 4 OF 4